FILE NAME:

REVISIONS				
ZONE	LTR	DESCRIPTION	DATE	APPROVED
△				
△				

"A"

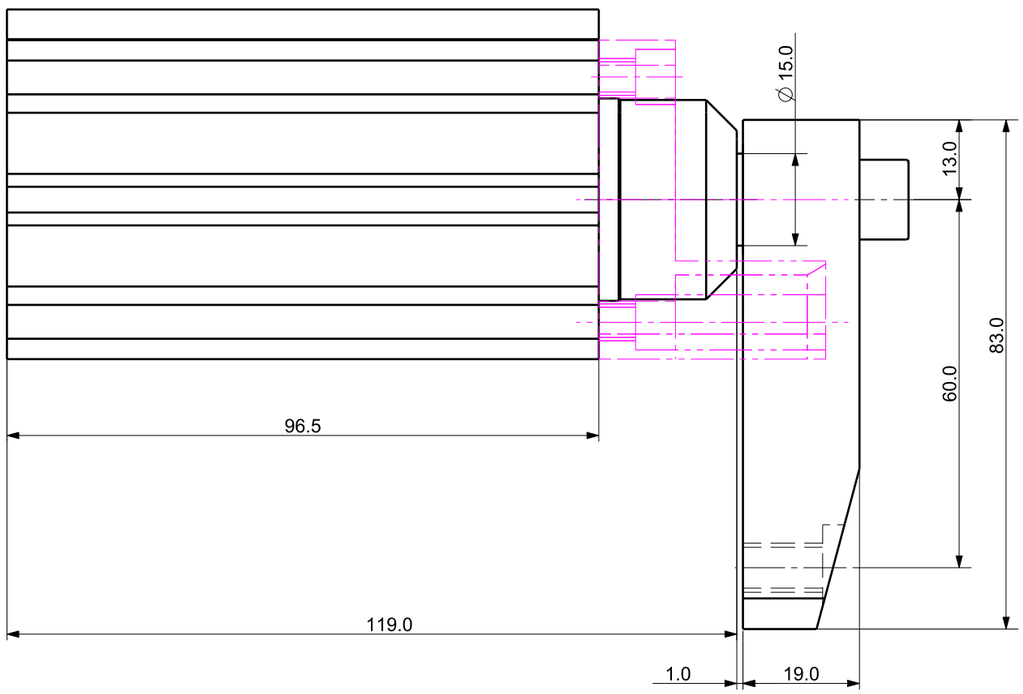

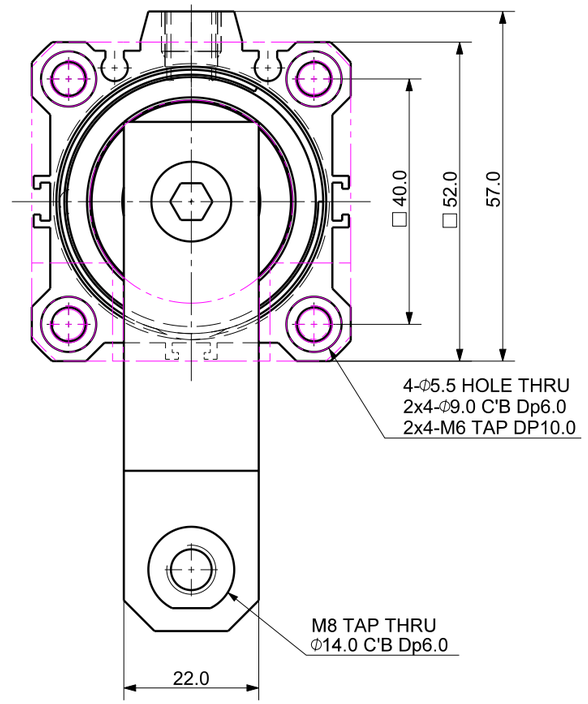

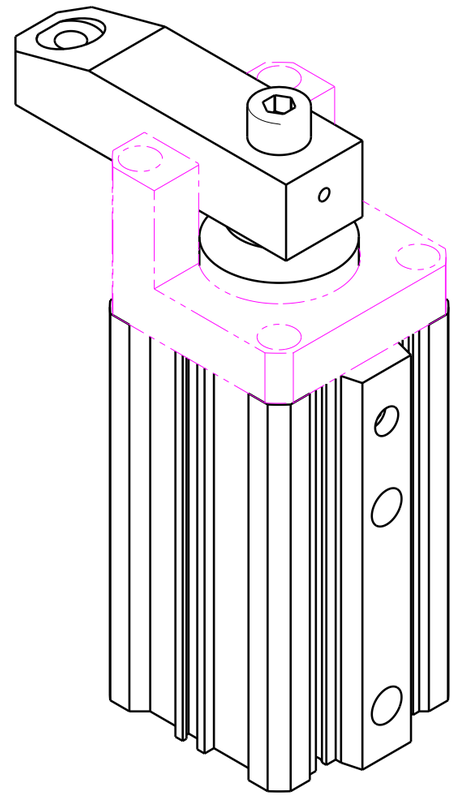

Isometric view (4:5)

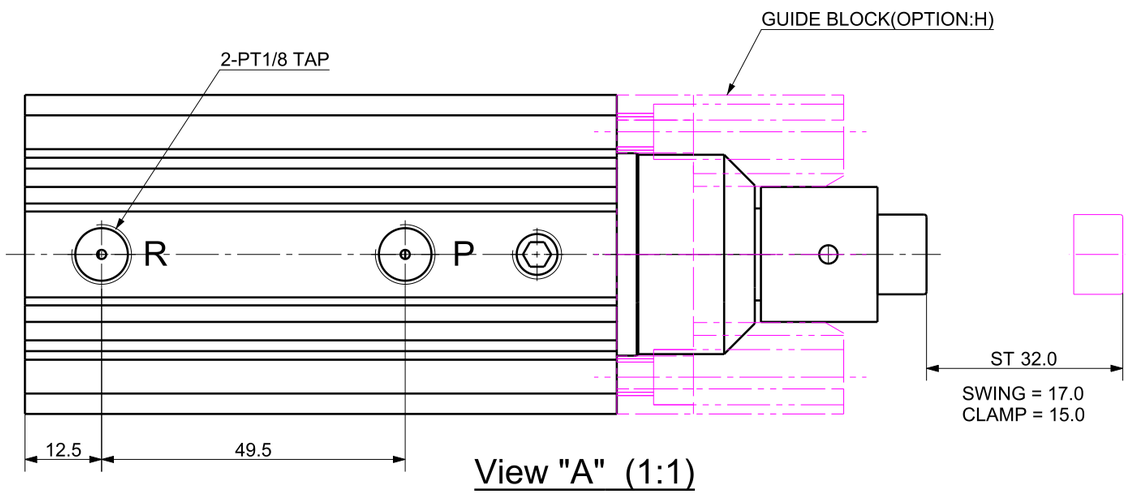

View "A" (1:1)

MODEL : SDx-4032AEH-L

H=GUIDE BLOCK

DET.NO	NAME	Q'TY	MAT'L	FINAL SIZES & PART No	REMARK

UNLESS OTHERWISE SPECIFIED	SIGNATURES	MO-DA-YR
DIMENSIONS ARE IN MM	DRAWN	
ALL SURFACES 6.3S	CHECKED	
TOLERANCES	APPROVED	
ANGLE ±		
X. ±		
.X ± 0.15		
.XX ±		
FINISH	WORK ORDER NO	
HEAT TREAT		

(주)케이제이에프
TOTAL CLAMPING SYSTEMS

TITLE

AIR SWING CLAMP (GUIDE BLOCK)

REF DWG NO.	DWG NO	
---	SDx-4032AE_F (SDx-4032AEH-L)	A3
SCALE /	TOOL ☐ PART ☐	SHEET OF